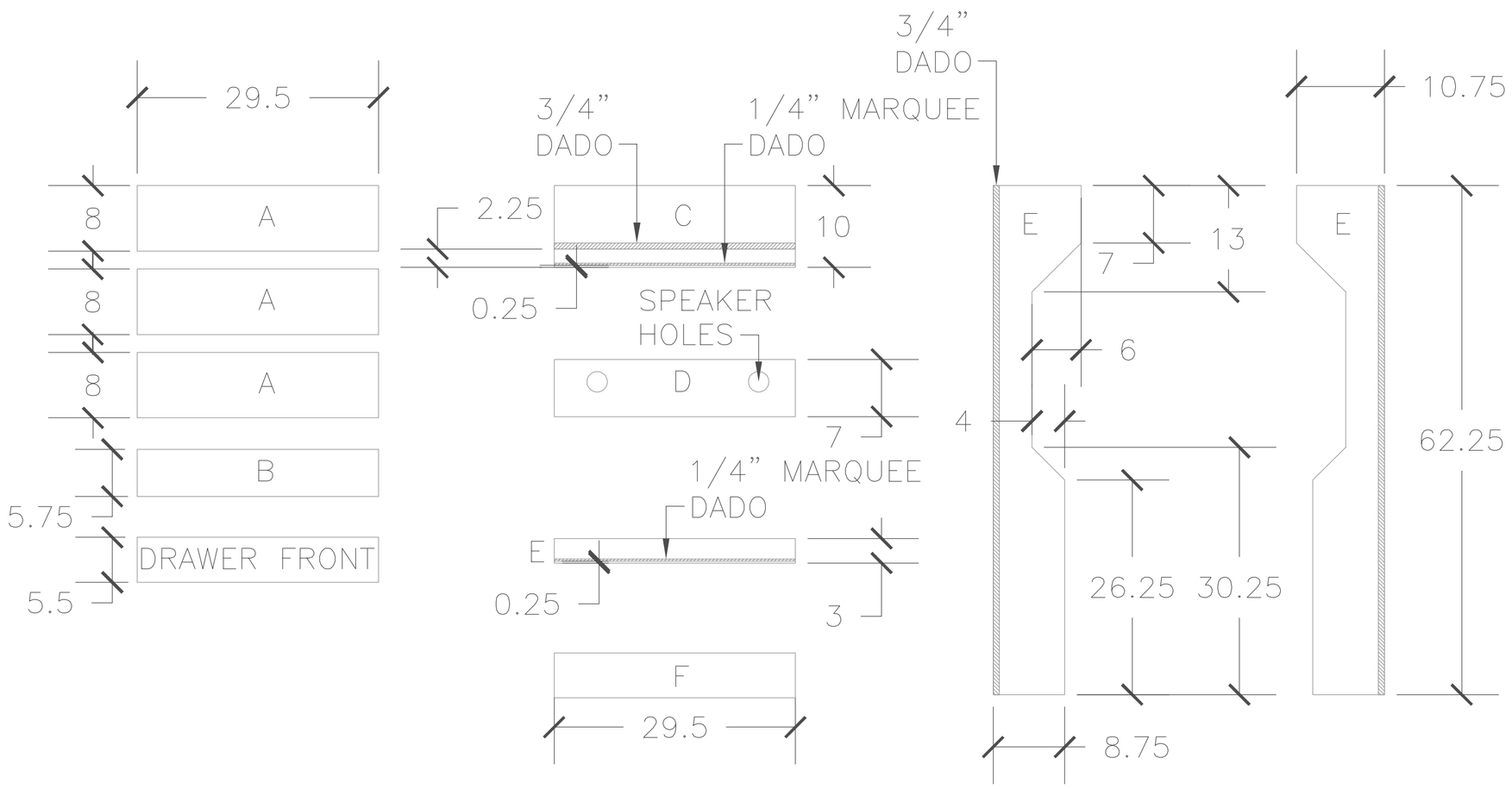

CUTS

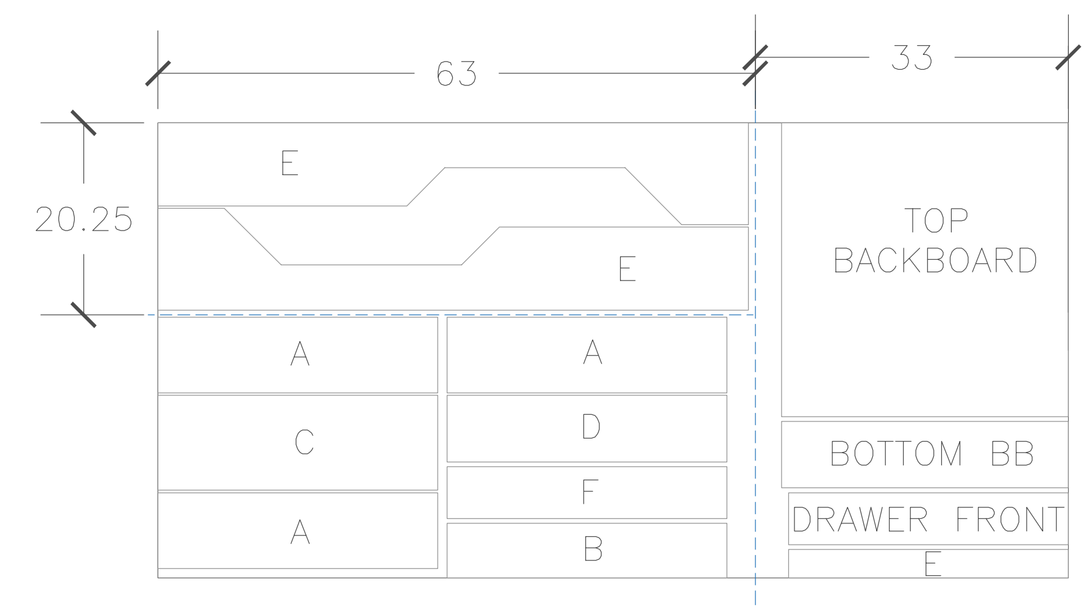

PLYWOOD BREAKDOWN

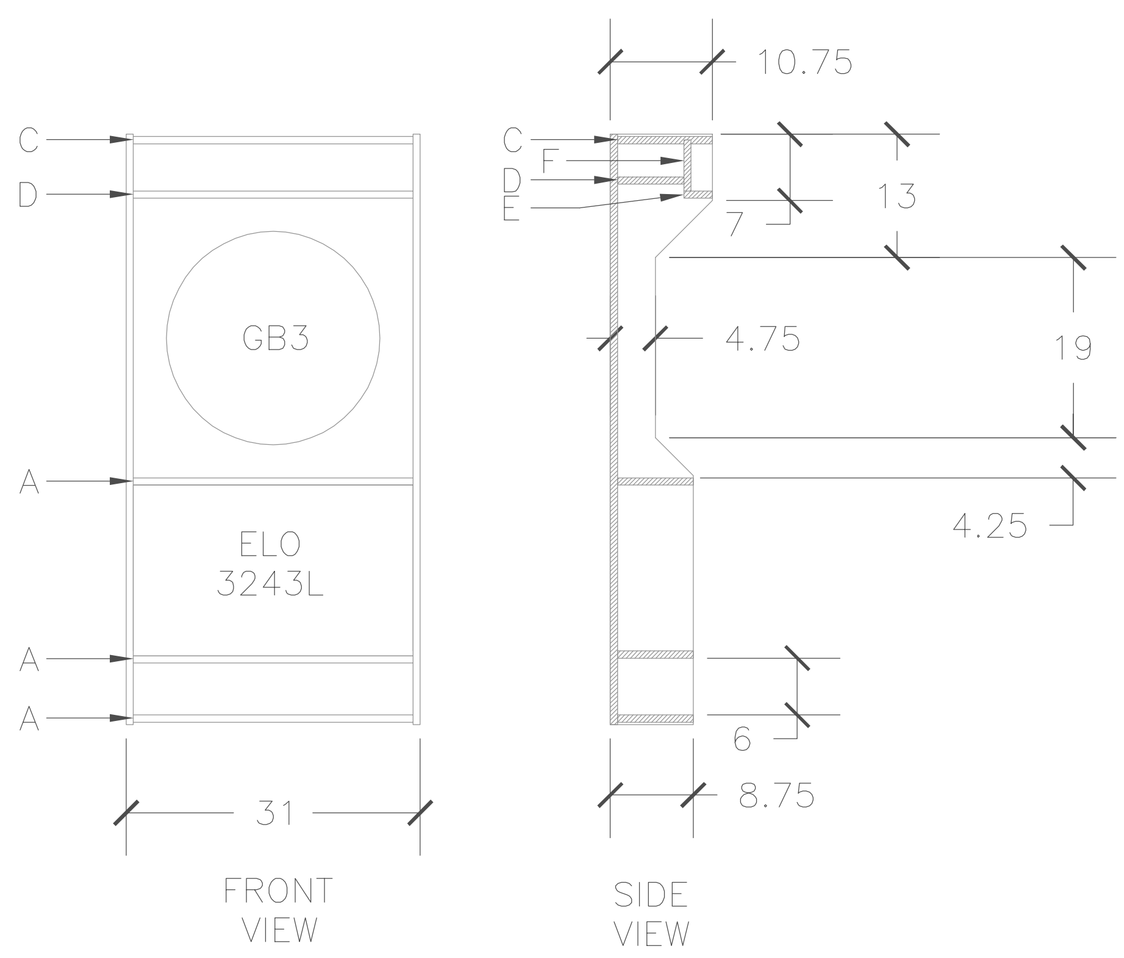

DIMENSIONAL DRAWING

BILL OF MATERIALS

- GRANBOARD 3S
- ELO 3243L TOUCH MONITOR
- DAYTONA AUDIO PC68-4 2 $\frac{1}{2}$" SPEAKERS
- 3" SPEAKER GRILLS
- KINTER K3118-2.1 AMP
- NVIDIA SHIELD
- ONE80 ILUMINIA LIGHT
- GOVEE LEDS FOR MARQUEE AND BACKLIGHTING

CONSTRUCTION NOTES

- 3/4" POPLAR PLAYWOOD
- RABBET ROUTED ON BACK OF SIDES FOR PLYWOOD BACKING
- POCKETHOLES AND GLUE USED FOR ALL OTHER JOINTS
- TMOULING USED ON SIDE EDGES
- EDGE BANDING ON OTHER SURFACES
- LIGHTING TUCKS UP UNDER PIECES D/E
- $\frac{1}{4}$" GAP LEFT ON BOTTOM, TOP AND IN FRONT OF A/C/E PIECES

BILL OF MATERIALS/NOTES